SABRE ITALIA

DECESPUGLIATORE SARP

VS360 e VS430

Da anno 2008

ESPLOSO RICAMBI

Via Spinà, 9 – C.P. 103 – 36033 ISOLA VICENTINA (VI) ITALIA
Tel. 0444 977655 r.a. – Fax 0444 977200 – E-mail info@sabreitalia.com – http://www.sabreitalia.com
P.I. IT00498100247 - R.I. VI/116-7564 - R.E.A. VI132452 - CARIVERONA BANCA S.p.A. ISOLA VIC.NA - ABI 06355 - CAB 60430 - c/c 249-5-52

Gear case and Driving apparatus	*Date :* 01. Jun, 2009	*Revision :* 00	*Page :* 1/2
Brand : SARP	*Model :* VS360/430	*Product Code :* 239028	

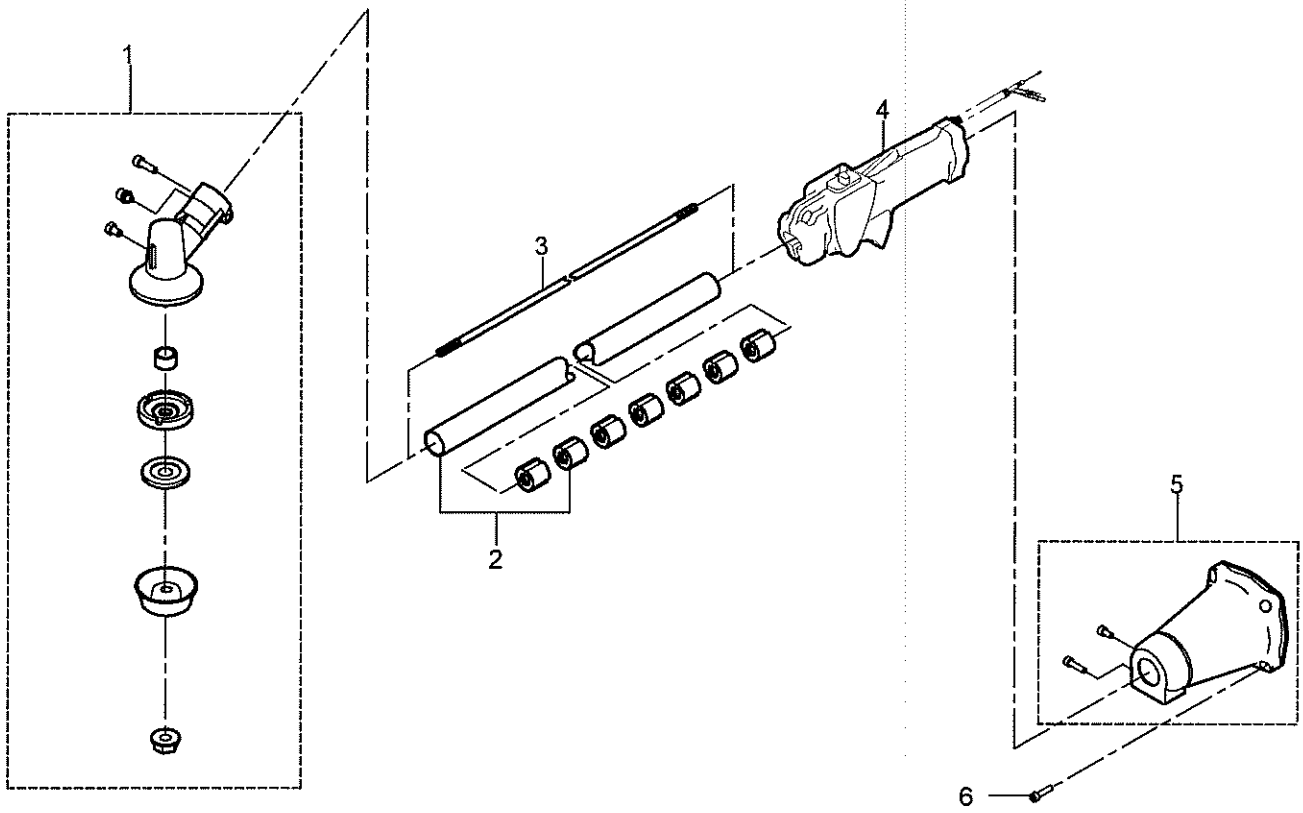

PARTS LIST

REF. No.	PARTS No.		PARTS NAME	Q'TY	INCLUDING			PRICE( )	RECOMM.(%) Lot.100		REMARKS
1	71008	318	GEAR CASE ASS'Y	1							
2	71130	169	MAIN PIPE C.P.	1							
3	64011	229	MAIN SHAFT	1							
4	71056	221	THROTTLE LEVER ASS'Y	1							
5	71010	244	65 CLUTCH CASE ASS'Y	1							
6	412N	0620	SOCKET SCREW	4							M6×20

CLUTCH CASE ASS'Y	Date : 04. Nov, 2008	Revision : 00	Page: 1/1
Product code : 71010-244-65		Model : V360,V430	

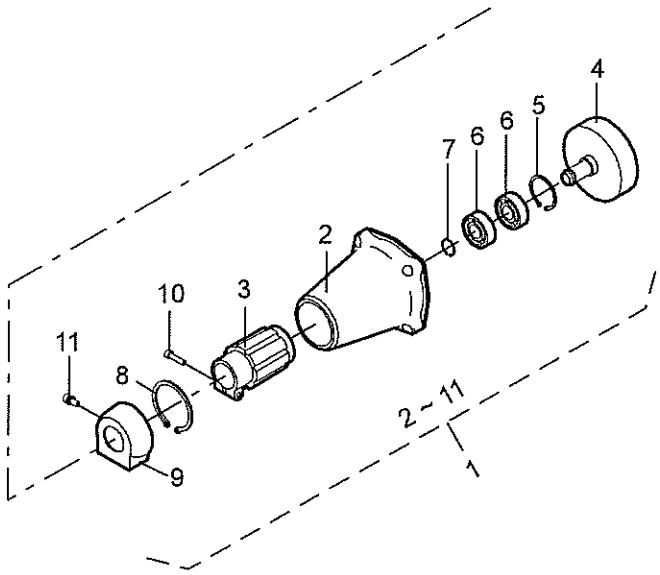

PARTS LIST

REF. No.	PARTS No.			PARTS NAME	Q'TY	INCLUDING			PRICE( )	RECOMM.(%) Lot.100		REMARKS
1	71010	244	65	CLUTCH CASE ASS'Y	1							
2	51030	187	65	CLUTCH CASE		1						
3	51119	119		INSERT RING C.P.		1						φ26
4	11014	211		CLUTCH DRUM C.P.		1						
5	811V	3500		C-SNAP RING		1						φ35
6	912B	6202		BEARING		2						6202 ZZ
7	812V	1500		C-SNAP RING		1						φ15
8	813V	4800		R-SNAP RING		1						φ48
9	36065	380		COVER		1						
10	412N	0630		SOCKET SCREW		1						M6×30
11	413N	0515		SOCKET SCREW (W/SW)		1						M5×15

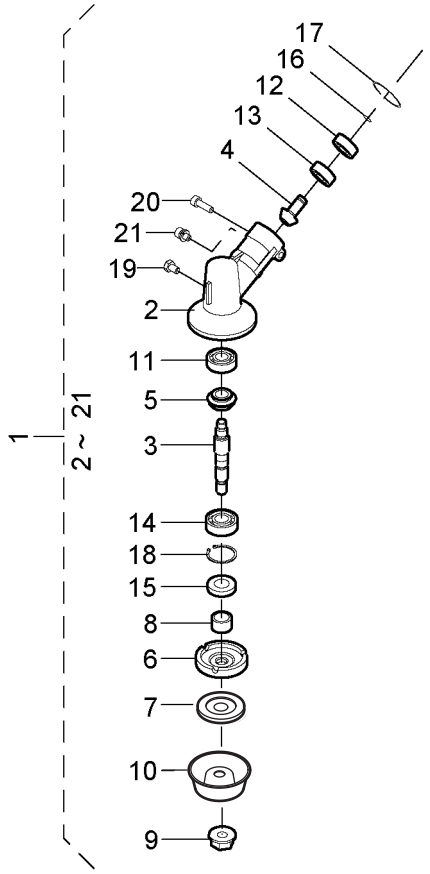

PARTS LIST

46014-341-00

				GEAR CASE ASSY					1/1		Nov. 30.2005
REF. No.	PARTS No.		PARTS NAME	Q'TY	INCLUDING			PRICE( )	RECOMM.(%) Lot.100		REMARKS
1	71008	318	GEAR CASE ASS'Y	1							
2	51001	267	GEAR CASE		1						
3	64001	144	SPLINE SHAFT		1						
4	78002	170	BEVEL PINION		1						
5	78001	150	BEVEL GEAR		1						
6	11001	150	HOLDER(A)		1						
7	11002	126	HOLDER(B)		1						
8	61001	119	SPLINE SLEEVE		1						
9	31001	106	SAW LOCK NUT		1						
10	11027	119	STABILIZER		1						
11	913B	0629	BEARING		1						
12	912B	6000	BEARING		1						
13	913B	6000	BEARING		1						
14	919B	6201	BEARING		1						
15	61002	128	OIL SEAL		1						
16	812V	1000	C-SNAP RING		1						
17	811V	2600	C-SNAP RING		1						
18	811V	3200	C-SNAP RING		1						
19	322N	0810	(+)HEXAGON BOLT		1						
20	412N	0620	SOCKET SCREW		1						
21	413N	0515	SOCKET SCREW(W/SW)		1						

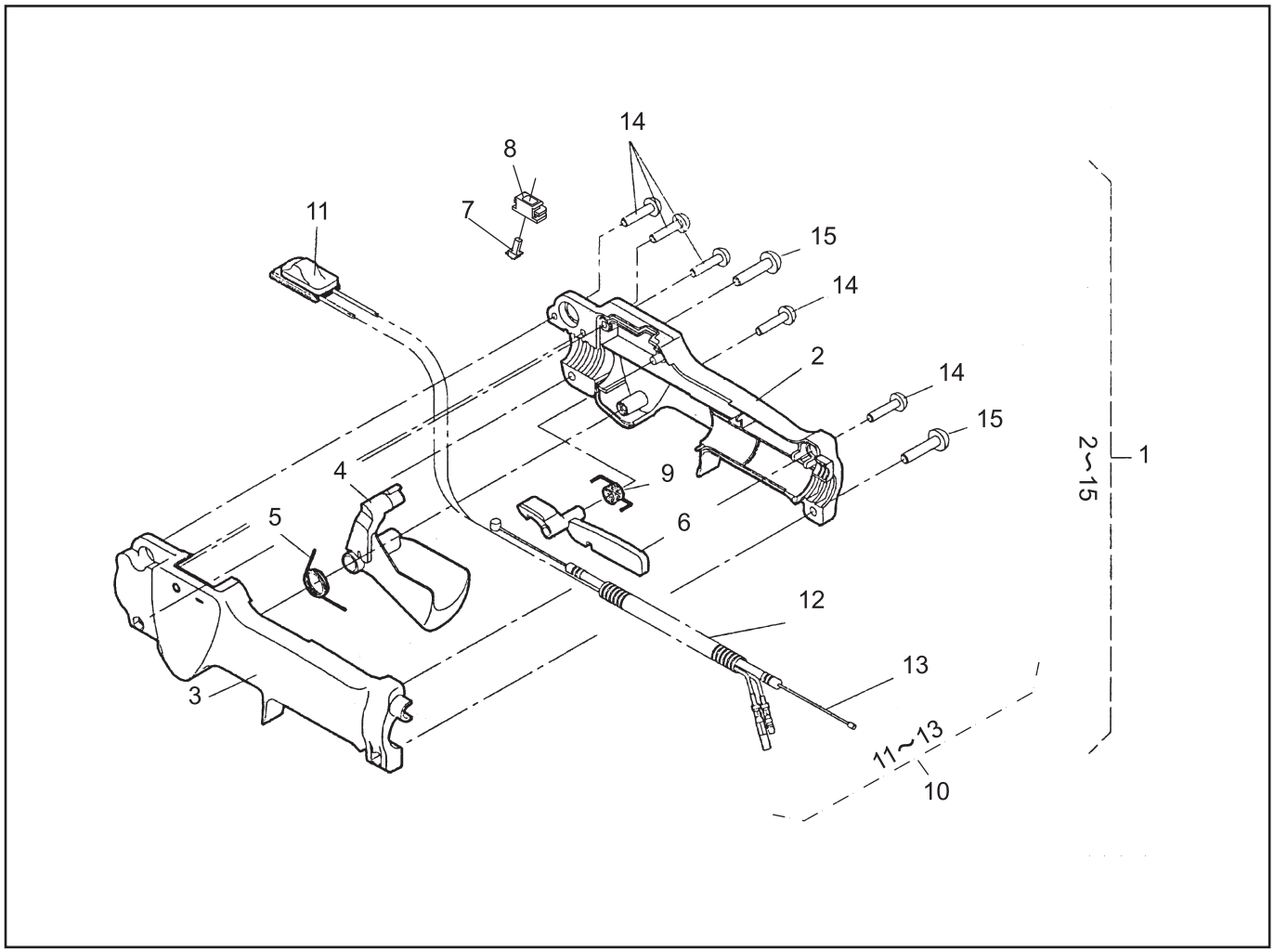

PARTS LIST

46014-361-01

					THROTTLE LEVER ASS'Y					1/1		23. Apr, 2008
REF. No.	PARTS No.			PARTS NAME	Q'TY	INCLUDING			PRICE( )	RECOMM.(%) Lot.100		REMARKS
1	71056	221		THROTTLE LEVER ASS'Y	1							ϕ26
2	51126	164		LEVER HOLDER		1						
3	51126	165		LEVER HOLDER		1						
4	11095	155		LEVER		1						
5	68013	318		SPRING		1						
6	11095	153		LEVER		1						
7	36092	110		HALF GAS LEVER		1						
8	51104	147		GUIDE		1						
9	68013	319		SPRING		1						
10	71180	145		TUBE ASS'Y		1						
11	71148	139		STOP SWITCH ASS'Y	1							
12	41003	187		TUBE	1							
13	91001	305		THROTTLE WIRE	1							
14	474N	0420		(+)TAPPING SCREW		5						4x20
15	372N	0520		(+/-)SCREW		2						M5x20

Handle and Fitting	Date : 01. Jun, 2009	Revision : 00	Page : 2/2
Brand : SARP	Model : VS360/430	Product Code : 239028	

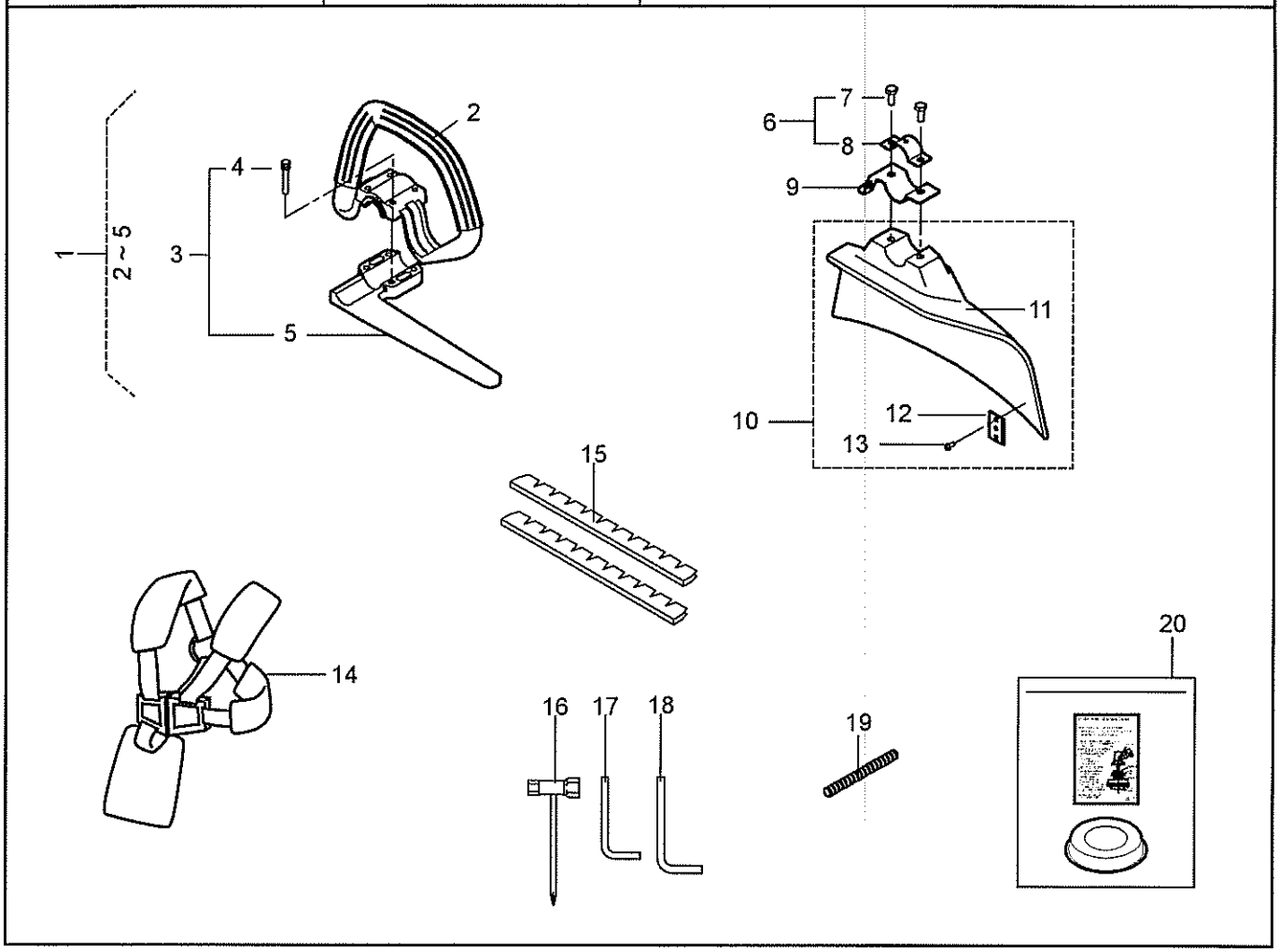

PARTS LIST

REF. No.	PARTS No.		PARTS NAME	Q'TY	INCLUDING			PRICE( )	RECOMM.(%) Lot.100		REMARKS
1	71304	118	SINGLE HANDLE SET	1							φ26
2	51023	153	SINGLE HANDLE		1						
3	71138	117	HANDLE BRACKET SET		1						
4	416U	0535	SOCKET SCREW (W/SW,PW)			4					M5×35
5	51116	161	HANDLE BRACKET			1					
6	71038	172	GUARD BAND SET	1							
7	412N	0615	SOCKET SCREW		2						M6×15
8	11029	132	SAFETY GUARD BAND		1						
9	11029	139	SAFETY GUARD BAND	1							
10	71303	114	SAFETY GUARD SET	1							
11	36046	160	SAFETY GUARD		1						
12	91014	177	BLADE		1						
13	474L	0410	(+)TAPPING SCREW		2						4×10
14	36063	206	SHOULDER BAND	1							
15	36044	107	BLADE COVER	1							
16	66006	117	BOX SPANNER	1							17×19+Screw driver
17	66007	103	L WRENCH	1							4mm
18	66007	104	L WRENCH	1							5mm
19	41003	128	TUBE	1							L=75
20	71001	124	GRASS COVER SET	1							